Euroheat & Power-Recommendation

for

Education, Training and Examination of Fitter and PE-welder

and

Certification of Fitter Companies

Approved by the Euroheat & Power Board
Prepared by Task Force Transport & Distribution
June 2010

Contents

1. Introduction

The quality of the joint casing application is crucial for the useful life and efficiency of district heating networks, constructed by using underground plastic jacket pipes. Damage caused by improper construction lead to moisture in the insulation and on the long-term to corrosion of the steel pipes.

Note: For plastic jacket pipe-system components, their static pipe design and the assembly, following Standard shall apply:

EN 253 *District heating pipes - Preinsulated bonded pipe systems for directly buried hot water networks - Pipe assembly of steel service pipe, polyurethane thermal insulation and outer casing of polyethylene*

EN 448 *District heating pipes - Preinsulated bonded pipe systems for directly buried hot water networks - Fitting assemblies of steel service pipes, polyurethane thermal insulation and outer casing of polyethylene*

EN 488 *District heating pipes - Preinsulated bonded pipe systems for directly buried hot water networks - Steel valve assembly for steel service pipes, polyurethane thermal insulation and outer casing of polyethylene*

EN 489 *District heating pipes - Preinsulated bonded pipe systems for directly buried hot water networks - Joint assembly for steel service pipes, polyurethane thermal insulation and outer casing of polyethylene*

EN 13941 *Design and installation of preinsulated bonded pipe systems for district heating*

EN 14419 *District heating pipes - Preinsulated bonded pipe systems for directly buried hot water networks - Surveillance systems*

EN 15698-1 *District heating pipes - Preinsulated bonded twin pipe systems for directly buried hot water networks - Part 1: Twin pipe assembly of steel service pipe, polyurethane thermal insulation and outer casing of polyethylene*

Based on

EHP/001 *Certification Guidelines for quality assessment of district heating pipes*

the production sites of manufacturers can be reviewed and certified, regarding the minimum inspection scope of pipes (EN 253) and fittings (EN 448).

Plastic jacket pipes are assembled onsite from pipes and fittings and other system components. A plastic jacket pipe connection is the establishment of the connection between the adjacent tubes and / or fittings, see Figure 1.

Note: EN 489

- *sets out requirements for pipe joints and type tests for joints,*
- *gives instructions for the welding of medium pipes,*
- *provides information on the examination of the onsite produced and pipe joints and*
- *provides recommendations for the training of fitters.*

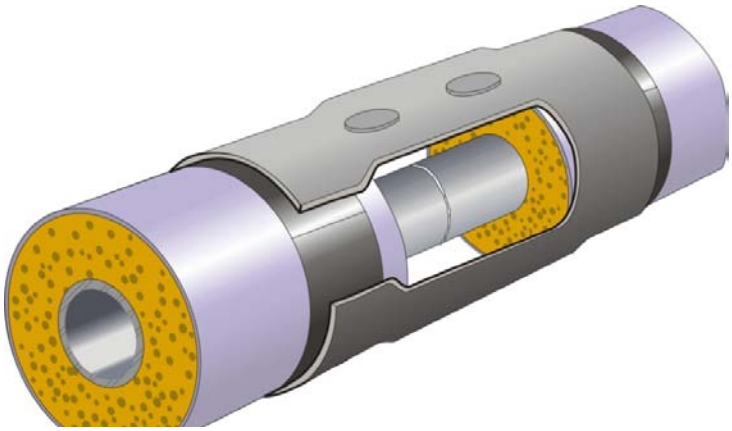

Figure 1: Example of a pipe connection between two plastic jacket pipes (Source: Canusa-CPS)

The steel medium pipes are welded to each other or to the steel fittings. The welding is performed by steel welders with a valid test certificate according to EN 287-1. The supplementary insulation and sealing / connection of the PE casing pipe has to be performed by fitters and PE welders. Their field of activity includes

- The installation of the monitoring and fault detection systems (if any)
- The sealing of the sleeve area or the connecting of the coated pipes,
- The assembly of special moldings of coated pipes (segment bends, junction structures, etc.)
- The insulation of the sleeve cavity,
- The attachment of expansion cushion.

Long-term statistics show that a large part of the damages can be traced back to poor performance qualities in the context of the joint casing application, see Figure 2. Inadequate implementation qualities may require repair work or even cause an interruption in the heat supply. Considerable expenditures are necessary to restore the required conditions of underground district heating pipes.

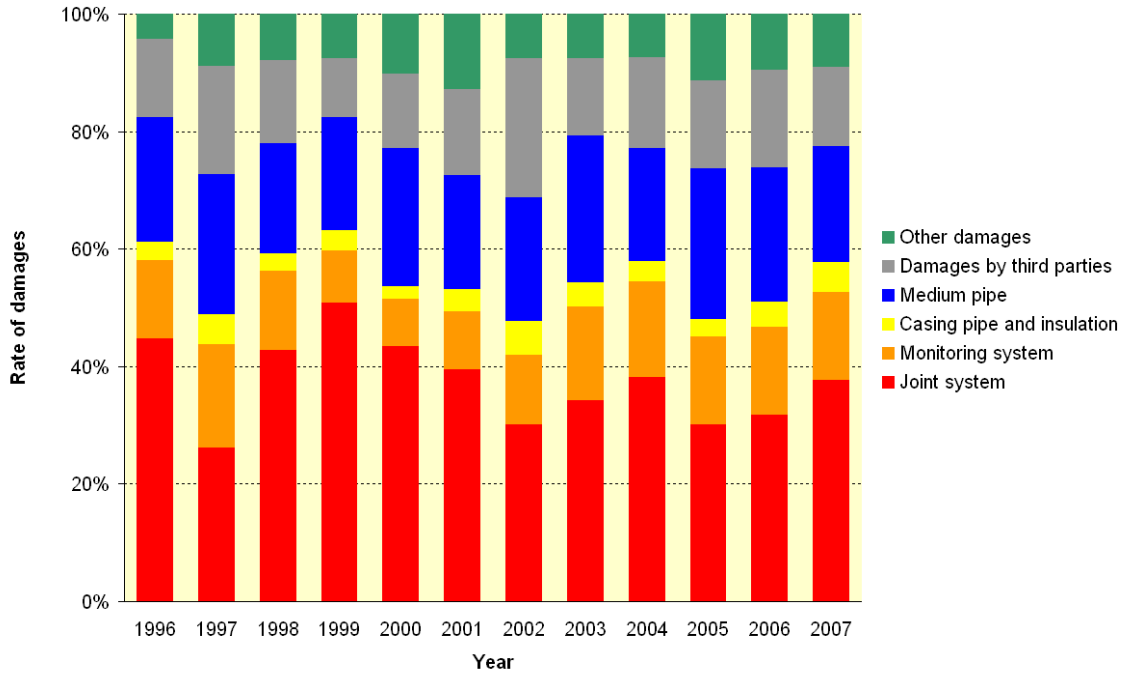

Figure 2: Breakdown of the causes of damage in Germany (Source: AGFW)

Through improving the skills and knowledge of fitters and companies active in this field, the damages of plastic jacket pipes, in particular during construction, were significantly reduced within the past decade in Germany, see Figure 3. Another reason for the reduction of damages is today's safer and easier to handle PE- and PE-X- joint casing systems.

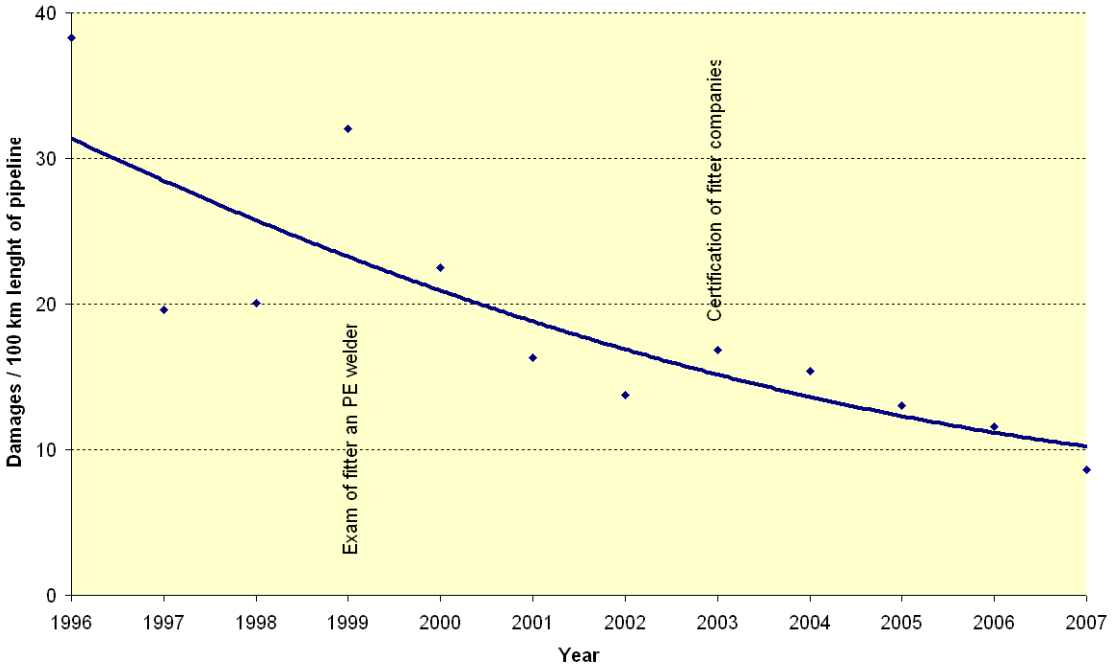

Figure 3: Damage development of plastic jacket pipes without damages by third parties in Germany (Source: AGFW)

The quality of pipe connections - and thus the damage caused by improper joint casing application - is significantly influenced by the following factors:

- Training and testing of fitters
- Qualification of fitter companies
  - § functional organization
  - § adequate financial basis
  - § experienced and professionally qualified management personnel
  - § certified fitters and PE welders
  - § appropriate and serviceable tools, equipment and machinery
  - § effective quality control at the construction site
- Workplaces and working conditions in the area of the joint casing according to the requirements of technical regulations
  - § Pipe trenches according to safety requirements with sufficient space
  - § Sufficient space around the tubes for the manufacture of the connecting and sealing of the jacket pipes
  - § Dry pipe trench (drainage)
  - § Protection against adverse weather conditions (umbrella, tent)
- Coordination of appointments with the construction
- Use of joint systems and materials according to EN 489
- Processing instructions of the joint manufacturer

  The processing instructions, that are essential for the quality of the jacket pipe joints and for the reaching of the expected service life, must be part of the manufacturer's documentation and delivered together with the components of the casing pipe connection. These have to mention at least the following topics:

  - § Working conditions

    The appropriate procedure for creating the best working conditions on the ground have to be established.

  - § Cleaning

    Appropriate procedures for cleaning and drying must be defined for:

    - o The entire section of a pipe connection between the pipes
    - o The front of both welded together pipe components
    - o The surface of the steel medium pipes
    - o The surface of the insulation
    - o The surface of the connection joint
    - o The surface of the sheating
    - o The sealing surfaces of the material used to coat the joint system pipe (connecting pipe sleeve and jacket pipe)
    - o The wetting surfaces of the insulation of the sleeve cavity.

    The instructions must contain the following sentence: "All wet foam must be to be removed from the pipe ends."

§ Monitoring

In case monitoring system are installed in jacket pipe connection, suitable methods for connecting the monitoring system should be established before the start of the joint assembly. This determination shall comply with EN 14419 and include procedures for at least the following:

- o reviewing the measuring elements after delivery
- o assembling works in jacket pipe connections to ensure the functioning of the system
- o examination of the assembly quality of the monitoring system during the installation
- o examination after the completion of a measuring section

§ Onsite steel welding

Appropriate procedures for the welding of steel pipes have to be established. These measures shall at least include "welding procedures" and “welding preparation and orientation".

§ Joint Connection

Appropriate instructions for handling and installation of the joint connection must be established.

Type-specific methods for testing the tightness of the jacket pipe joints must be described.

§ Thermal insulation of the jacket pipe joint

Appropriate procedures for the onsite foaming or for the installation of prefabricated insulation elements have to be described.

For the foaming at the construction site at least the following methods have to be described:

- o Measures to be taken, if the surface temperatures is outside the range of 15 °C to 45 °C,
- o temperatures, at which the PUR heat insulation may be stored when the temperature is outside the range of 15 °C to 25 °C,
- o measures to be taken to ensure that during the foaming of the joint the air can escape optimally and no excessive losses of the foam occur.

For the installation of prefabricated insulation elements at least the following procedures have to be described:

- o storage procedures, in order to avoid damage of the insulation elements and to keep them dry,
- o assembly procedures to prevent gaps between the insulation of the jacket pipe joints and the pipe ends.

- Adequate reimbursement for installation and assembly work
- Appropriate monitoring of the construction work according to technical specifications and by professional supervisors

§ Construction site organization

§ Construction timing specifications

§ Excavation of the pipe trench (Sheeting, Scarping)

§ Pipeline construction

§ Joint casing application and fitters

In order to ensure the necessary high-quality joint casing application, fitters have to have sufficient technical knowledge and manual skills regarding the utilized joint systems. According to EN 489

- every single step in the processing of the application of the joint casing system must be according to the instructions of the manufacturer, to ensure that the connection of the jacket pipe has the same quality as the one of the type testing,
- those persons, that connect pre fabricated plastic jacket pipe components posses a valid qualification, which confirms that they received an appropriate training for the utilized medium pipe connection and pipe system,
- PE-welder must possess a proof of a valid qualification, in which their ability to conduct reproducible welds in the specified quality is confirmed.

Fitters that connect prefabricated insulated jacket pipe systems, as well as supervising personnel must possess theoretical knowledge and practical skills in relation to the following areas:

- the materials used;
- used joint system;
- procedure of thermal insulation;
- installation of the monitoring system;
- quality and error criteria;
- provisions for the processing and handling of materials;
- quality inspection and documentation;
- accident protection, applicable safety precautions.

Training and inspection contents are indicated in EN 489, Annex C.

The required training programs may be carried out by manufacturers, suppliers or other competent organizations, such as technical colleges. A qualification certificate is the prove of the received training and skills.

The training programs should include the disciplines and subjects mentioned in EN 489:2003, Annex C and reserve sufficient time for practical exercises with connection methods, insulation techniques and the installation of surveillance systems. The processing of jacked pipe joints under construction site conditions should be a part of the training.

2. Recommendation EHP

The quality of the joint casing application depends largely on the skills, knowledge and quality awareness of the fitters. The contractually agreed and technically specified - in particular EN 489 - requirements regarding the quality of a construction can only be ensured by such professionals that

- have sufficient specialized knowledge,
- master the necessary manual skills,
- regular conduct joint casing application.

In EN 489:2009, the certification of fitters and PE welders is not further defined. The implementation is subject to the concerned interest groups or individual countries. The comparability of qualifications at European level is not possible.

EHP recommends:

For assembly work of plastic jacket pipes only certified and therefore trained and tested fitters and PE welders are appointed.

Their training and certification should be organized and implement at the national level.

The fitters and PE welders must repeatedly prove their knowledge and skills at appropriate intervals.

The valid qualification has to be confirmed at the construction site through a personalized certificate.

Fitter and PE welder shall be registered.

Fitter companies shall be certificated and authorized.

Authorised companies shall equip each joint with a label containing the name of the company and a serial joint number, by which the fitter can be identified.

Note:

In Austria, Finland, Germany and Sweden the national District Heating association ensures the implementation and quality of the certification process (see also the examples in the following Annexes).

Instead of District Heating associations other bodies such as technical universities, institutes etc. can be in charge of certification.

Another possibility is to base the certification process and education on the producer of the joint system.

Annex Qualification of fitters and PE welders as well as certification of fitter companies in different countries (informative)

The following outlined procedures of individual countries show how training and the testing of fitters and PE-welders, or the verification / certification of fitter companies are regulated in the respective country.

More information on a particular approach can be obtained from the national District Heating associations.

A 1 Finland

Contact to: Finnish Energy Industries
PO Box 100
FI-00101 HELSINKI
Veli-Pekka Sirola, Tel.: +358 9 5305 2303, Mailto: veli-pekka.sirola@energia.fi

A 1.1 Qualification and certification scheme for companies and fitters

In Finland there is a national qualification scheme for fitter companies and fitters. The scheme that was started about 20 years ago covers certification of both fitter companies and fitters. The certificates can cover heat shrinkable joint installation and insulation or PE-welding of casings or both of them. Welded casing joints are not covered as they mostly are company-specific and thus certification of fitters of welded joints should be borne by the producer.

The scheme is organised and operated in cooperation by two associations, Finnish Energy Industries and Finnish Plastics Industries. There is a common Certification Board managing and operating the scheme.

Certification is naturally voluntary for companies and fitters. Finnish Energy Industries recommends energy companies to use only certified companies and fitters for pipe installation in their projects, and this is nowadays common practise in Finland.

The goal of the scheme is to advance sound competition, ensure the capacity of fitter companies and sufficient knowledge and skills of fitters and hence quality of joint installations.

Finnish Energy Industries keeps lists of certified companies and fitters updated on its web site.

The certification process is regulated in a special document describing the requirements and the procedures of certification.

A 1.2 Requirements for fitter certificate

General requirements for a fitter certificate are:

- A 3-day course on joint installation and/or PE-welding with passed theoretical exams and practical tests
- Licence for so called ”hot installations” (welding, flame cutting, heat shrinking…)

A 1.2.1 Validity of the certificate

The certificate is valid for one year at a time. It is reissued annually by written evidence of fitter’s work experience during past year (evidence from e.g. a district heating company, that the fitter has performed joint installations and/or PE-welding during the past year). If this is not the case, the fitter shall make a test installation as condition for certificate renewal. Renewal by test installation is possible maximum two times, after that a new 3-day course with exams is required.

There are no additional requirements for repetition of the course and exams e.g. at certain intervals.

A 1.2.2 Training of fitters and PE welders

There is a 3-day course on heat shrinkable joint installation and insulation and a separate 3-day course on PE-welding of casings with theoretical exams and practical tests. These courses are obligatory for fitters wishing to receive a fitter certificate, either covering both joint installation and PE-welding or one of them.

The education and training is carried out by one education and training centre for the whole country. This makes it easier to manage the system and ensures that the contents and implementation of the education and training and exams is the same for all.

Contents of the course on joint installation:

- general about DH pipes and networks
- materials
- joint technologies
- installation of joints
- surveillance systems and alarm wire joints (just a lecture, not included in exams, as surveillance systems are not commonly used in Finland)
- work safety in joint installations
- practical training
- supervision, tests and inspections of joint installations
- inspection and evaluation of practical test installation
- theoretical and practical exams

Contents of the course on PE-welding of casings:

- plastic materials, properties and identification
- welding preparations
- welding machines and devices
- welding methods
- welding parameters and controls
- filler materials
- practical training (pipes, t-pieces, bends, repairs)
- theoretical exam and practical tests

Joint producers should evaluate if additional training and/or additional certification by the producer for their specific joint systems is needed (e.g. when new joint systems are put on the market).

A 1.3 Requirements for fitter company certificate

General requirements for a fitter company certificate are:

- The company is registered in Register of Companies
- The company has sufficient technical and economical capacities

- The company employs a full-time foreman/leading fitter responsible for the installation work quality with at least one year experience as a foreman or three years as a fitter and a passed 3-day course on joint installation
- The company employs at least one permanent fitter with a fitter certificate
- The company has a valid liability insurance

All fitters of a company should be certified, not just one. It is up to the district heating company to require, take care and control that all fitters carrying out joint installation or PE-welding in their projects are certified.

A 1.3.1 Validity of the certificate

The certificate is valid for one year at a time. It is reissued annually by written evidence that the requirements described above are still fulfilled.

A 1.4 On-site quality control

Certification of fitter companies and fitters ensures the necessary preconditions and qualifications for a good quality joint installation are there, but does not mean that on-site quality control is not needed anymore. On-site control is responsibility of DH companies.

Part of on-site control is making sure that all fitters carrying out jointing of pipes are certified. It is also recommended for DH companies to take care that fitters of every joint in the field will be documented and marked on the joint.

On-site control is linked to the certification so that significant and repeated defects in installation quality communicated to the Certification Board may lead to:

- remark
- reneval of the 3-day course with exam and test
- limitation of the scope of certificate
- public notice (to be communicated to DH companies)
- withdraval of certificate of fitter or fitter and company.

A 2 Germany / Austria

Contact to: AGFW | Der Energieeffizienzverband für Wärme, Kälte und KWK e. V.
Stresemannallee 28
D-60596 Frankfurt/Main
Rolf Besier, Tel.: +49 69 6304-346, Mailto: r.besier@agfw.de

A 2.1 Training of fitters and PE welders

The training is carried out by

- companies that provide joint casing application services
- technical colleges

The training at technical colleges for fitter and PE welder lasts five days. It includes the exam for fitter according to AGFW worksheet FW 603 and the exam for PE welders according to DVS Directive 2212-4.

The content specified in EN 489, as well as the contents of the AGFW worksheet FW 401 should be the subject of the training, see Figure 4 and Figure 5. The training must provide sufficient time for practical exercises.

Guideline DVS 2284 sets the contents and scope of the training for PE-welder. It is divided into 14 lessons of specific theory and professional practice with 22 teaching units, see Figure 6.

Figure 4: Specialized Training (Source: SKZ)

Figure 5: Exercises for testing the manual skills fitters according to AGFW worksheet FW 603 (Source: SKZ)

Figure 6: Exercises for testing the manual skills of PE welders according to DVS 2212-4 (Source: SKZ)

A 2.2 Exam of fitters according to AGFW worksheet FW 603

The AGFW worksheet FW 603 specifies the technical and practical exam of fitters. It is the basis for the initial exam and the repeated tests. Contents of the exam are

- Preparation for joint casing application
- Assembly and testing of the monitoring and error tracking system;
- Preparation of the joint system for processing and sealing,
- Processing of permanent sealings of the entire joint system (PE-shrink sleeve with hotmelt adhesive and PE-X-Shrink bands),
- Testing of the joint system for leakages prior to the insulation by means of air pressure,

- Insulation of sleeve cavity with polyurethane foam,
- Sealing of the foaming holes with PEwelding plugs (procedure heated plate welding)
- Final, non-destructive testing of the quality of the joint casing applicatio , carried out by the fitter that is tested.

Note: In the practical exam only one joint system can be examined. When successfully passing a test on the sample, it can be assumed that the fitter is also able to work with other professional systems.

A 2.2.1 Test Centre

The exam may only provided by manufacturers and technical schools, recognized by the AGFW worksheet FW-604.

The exam has to take place in front of examination board. Through the composition of the examination board it has to be ensured that all the content of the exam are covered.

If the exam is performed by manufacturers, one member of the examination board must be an examiners appointed by AGFW.

A 2.2.2 Admission to Exams

Persons may participate at the initial tests, if through their training and previous work it can be expected that they have sufficient technical knowledge and skills in order to pass the exam. This is usually the case if a person has at least one year experience as assistant fitter and sufficient knowledge of the materials and processes on the basis of the relevant technical regulations. The practical work has to be certified by the companies. In case of doubt, the test center can request an approval test.

The practical test may only be performed using the necessary personal protection equipment. This has to be provided by the fitter to be tested. It includes amongst other safety goggles, gloves, safety shoes, work pants, -jacket and -helmet.

The practical exam has to be performed by the fitter with its own tools, equipment and machinery. These must be in a technically flawless security condition. In case of defects they may not be used.

Note: As the exam has to be carried out by the fitters with their own equipment and machinery, the exam is not only a purely personal examination but also in some sense a procedural examination. This approach aims to ensure that the fitters and their companies are equipped with appropriately.

If the exam is in a direct connection to an educational program, the technical equipment of the test center may also be used. Repeated tests have in any case be carried out with the equipment of the respective fitter.

A 2.2.3 Theoretical Exam

In the theoretical exam of joint casing application the necessary expertise in the practical work rules and safety measures have to be demonstrated. Subjects of the theoretical exam are:

- Occupational Safety
  - § Securing the work area
  - § Personal protection equipment
  - § Execution of pipe trenches
  - § Storage, transport and processing of chemicals and flammable / explosive substances
    - equipment and tools etc.
- Requirements for joint casing application

  - § Conditions of work and surrounding
  - § Applied systems and products
  - § Used tools and equipment
- Preparation of joint casing application
- Assembly and testing of the plastic jacket pipes-monitoring and fault detection systems
- Preparation of the sealing surfaces
- Processing and sealing of joint systems with permanently melt adhesives
- Testing of the tightness of the joint system before insulation
- Preparation of a polyurethane foam sample
- Sleeve cavity insulation with polyurethane foam
- Sealing the foaming holes with welding plugs
- Testing by the fitter

The exam is carried out within 45 minutes by a written multiple-choice test. There are 30 weighted questions. The weighting factors 1-3 take into account the practical importance of the joint casing application.

The theoretical exam is considered passed if at least 75% of possible points are achieved.

The repetition of the exam on the same day is not allowed.

It is mandatory to pass the theoretical exam before the practical exam.

A 2.2.4 Practical Exam

In the practical exam the fitters have to demonstrate their manual skills.

Subjects are:

- Preparation of joint casing application
- Assembly and testing of the plastic jacket pipes-monitoring and fault detection systems
- Preparation of the sealing surfaces
- Processing and sealing of joint systems with permanently melt adhesives
- Testing of the tightness of the joint system before insulation through air pressure
- Preparation of a polyurethane foam sample
- Sleeve cavity insulation with polyurethane foam
- Sealing the foaming holes with welding plugs
- Testing by the fitter

The test sample shown in Figure 7 has to be attached during the exam on the floor in a similar way as at the construction site. The level of support from the floor to the bottom of the medium pipe must not exceed 20 cm. The position of the test sample has to be unchanged during the exam.

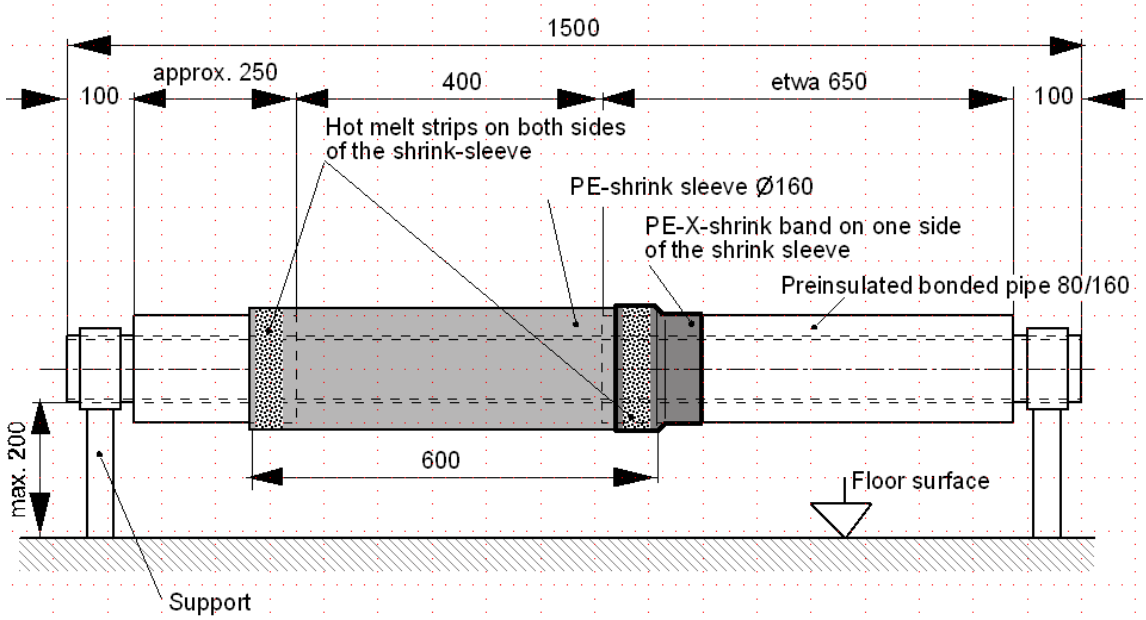

Figure **7**: Test sample for exam according to AGFW worksheet FW 603

The individual work steps and the final test sample as well as the sample taken from the test sample by the examiners, undergo a visual inspection and mechanical-technological tests.

The practical test is passed if the requirements on the test sample and the taken sample in the visual assessment and the mechanical-technological tests are met.

The repetition of the practical exam on the same day is not allowed.

A 2.2.5 Overall Rating

To pass the exam as a fitter both the theoretical exam and the practical exam have to be successfully passed.

A failed test can be repeated. The repeated exam should be accompanied by adequate practical and theoretical training.

To demonstrate the successfully passed exam the fitters receive of an exam certificate and an ID, see Figure 8. This ID mentions the name of the fitter and validity of the qualifications specified. The ID must be readable under construction site conditions during the period of validity.

Figure 8: ID of fitters according to AGFW-Worksheet FW 603 (Source: SKZ)

A 2.2.6 Period of validity and repetition of exam

The validity of the exam is two years. The repletion of the exam may be integrated in an additional training session.

The repetition of the exam is always necessary if the fitter has interrupted his activity for longer than 6 months.

A 2.2.7 Technical Rules

- AGFW worksheet FW 603; edition 12.2007
  Joint casing application on preinsulated bonded pipes and flexible pipes; examination of fitters
- Rules of procedures for examination of fitters work sheet according to FW 603; edition 12.2007
- AGFW worksheet FW 604; edition 12.2007
  Joint casing on preinsulated bonded pipes and flexible pipes; acknowledgment from inspection stations to the examination from fitters of work sheet FW 603
- Rules of procedure for acknowledgment of inspection stations according to work sheet FW 604; edition 12.2007
- Conditions for recognition of testing centers according to FW 604, and the assessment of joint mechanics after FW 603; edition 12.2007
- Qualification criteria for recognition as an examiner AGFW FW-603 and as examiners AGFW FW 604; edition 12.2007

A 2.3 Exam of PE welders according to DVS 2212-4

In addition to the exam as a fitter according to AGFW worksheet FW 603, an exam as a PE welder according to DVS 2212-4 has to be passed if PE-welded joints have to be applied on the jacket tubes. This provides the permission for welding with the procedures hot gas string bead welding and hot gas extrusion welding.

The guideline DVS 2212-4 is the basis for the initial exam and repetition of the exam on the correct and professional execution of PE welding procedures such as hot gas string bead welding and hot gas extrusion welding at construction sites on plastic jacket pipes.

The directive does not apply to other PE-welding techniques such as heated plate welding or sleeve welding with incorporated electric heating elements. For these techniques complementary trainings or exams have to be carried out by the manufacturer.

A 2.3.1 Test Centre

The exam is carried out in a test center and supervised by an examiner for plastic welders. The test center must have the necessary facilities to carry out the tests. If the exam takes place at the end of a preparatory course for the exam for example according to DVS 2284, the trainer and evaluator may be no identical for any candidates.

A 2.3.2 Admission to Exam

Only welder who passed the exam on plastic welding according to guideline DVS 2212-1, subgroup I-5 and II-1 may participate in the exam and only if from their training and previous work it can be expected that they posses sufficient technical knowledge and skills to pass the exam.

This is usually the case when one of the following conditions is met:

- At least one year experience as a plastic welder and a satisfactory knowledge of the materials and processes involved.
- Technical training (e. g., skilled worker or journeyman in a relevant profession), sufficient experience in the processing of semi-finished products made of thermoplastic materials with the welding procedures hot gas string bead welding and hot gas welding by extrusion of filler material and successful participation in the course of preparation for the welding test in accordance with DVS 2284
- Technical training (e. g., skilled worker or journeyman in a relevant profession) and successful participation in
  - a basic course on the processing of semi-finished products made of thermoplastics
  - the course to prepare for the exam as plastic welder according to DVS 2284.

The training and practical work have to be demonstrate by certificates. In case of doubt, the test center can perform an approval test.

A 2.3.3 Theoretical Exam

In the theoretical exam the welder has to demonstrate that he possesses the required working knowledge and understanding of safety measures for an accident-free and professional work. The test includes the following subjects:

- Thermoplastics
  - Denomination
  - Strength characteristics
  - Influence of temperature
  - Quality and condition of the semi finished product as well as welding consumables
- Welding
  - Specificities of the procedures hot gas string bead welding and hot gas welding by extrusion of filler material on plastic jacket pipes
  - Requirements for basic and welding consumables, equipment, execution qualities
  - Welding parameters
  - Weld preperation
  - Implementation of welding procedures
  - Welding Minutes
  - Occupational safety

A written multiple-choice serves as the basis. As part of the initial exam at least 30 questions, in the context of a repeated exam at least 15 questions have to be answered.

The exams according to DVS 2212-1, subgroup I-5 and II-1, as well as according to DVS 2212-4 may be held consecutively, i. e. the exam for both may be held on one day. In this case, the theoretical I exam has to be passed just once.

The theoretical exam shall be considered passed if at least 66% of possible points are achieved.

A 2.3.4 Practical Exam

In the practical exam, the PE welder has to prepare a test sample and provide for each weld seam a welding protocol.

The equipment to be used and machinery must be in a technically flawless security condition. The welder can decide whether to use his own tools and machines (or from his employers), or those of the test center.

During the weld preparation and the welding process, the test sample has to be fixed in a similar location, above the floor, as on the construction site. The height of the free supports affixed on the steel medium pipe may at most be 200 mm, from the floor to the under edge of the steel medium pipe. The branch pipe has to lean 45 ° from the vertical.

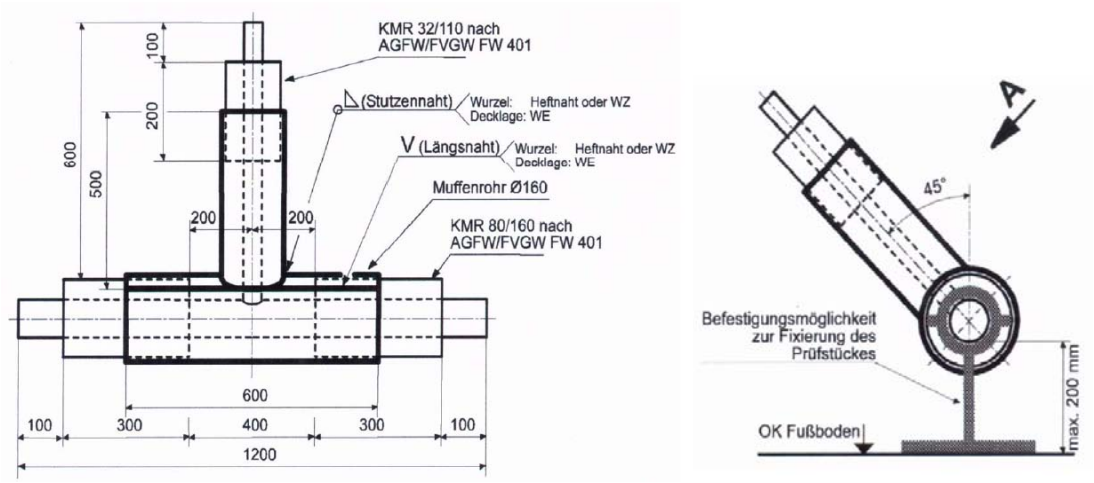

Figure 9: Test sample for the exam as PE welders according to guideline DVS 2212-4

The test sample has to be inspected visually during and after manufacturing. Thereafter, samples for further tests including visual quality of the weld and for subsequent mechanical-technological tests have to be taken.

A 2.3.5 Overall assessment

To pass the exam as a PE welder both the theoretical exam and the practical exam have to be successfully passed.

A failed test can be repeated. The repeated exam should be accompanied by adequate practical and theoretical training.

To demonstrate the successfully passed exam the fitters receive of an exam certificate and an ID, see Figure 10. This ID mentions the name of the fitter and validity of the qualifications specified. The ID must be readable under construction site conditions during the period of validity.

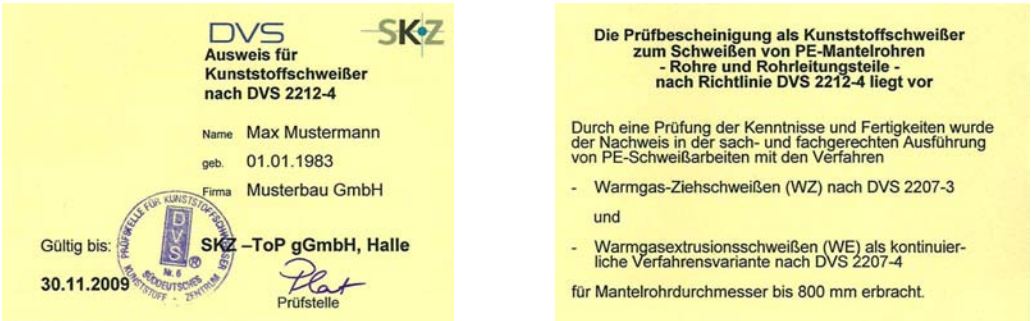

Figure 10: ID of PE welder according to DVS 2212-4 (Source: SKZ)

A 2.3.6 Validity

The welder must annually repeat the exam. A retest is always due necessary if the welder has interrupted his work for longer than six months.

The validity of the welder exam may be prolonged by a test centre for two years, if at the expiry of the ID, through a working sample the manual skill and quality are demonstrated.

Therefore one for the PE welders produced weld - possibly out of a difficult working position - must be checked at a unforeseen time.

A 2.3.7 Technical Rules

- DVS 2212-1
  Exam of PE welders; test group I and II
- DVS 2212-4; edition 9.2004
  Exam of PE welders; welding of plastic jacket pipes – pipes and pipe parts
- DVS 2284; edition 9.2004
  DVS-course; PE welders - plastic jacket pipes; preparation for the welding test in accordance with guideline DVS 2212-4

A 2.4 Certification of fitter companies

Regulations claim that joint casing application has to be performed by qualified companies. This also applies to the assembly of plastic jacket pipes. Qualified companies are those, which are commercially related to the execution of published services and can demonstrate their qualification.

The contracting authority must ensure - and, where appropriate, can demonstrate - that only suitably qualified companies and institutes perform these activities.

The requirements and the procedure of the certification process are regulated in the AGFW worksheet FW 605.

A 2.4.1 Requirements for enterprises and content of examination

- Formal Requirements
  - § Control of documents
- Organization
  - § The management of the company must ensure that the responsibilities and authority within the organization are established and publicized. This applies for the following employees:
    - o The responsible professional
    - o The quality officer

      The responsible professional and the quality officer must be employed by the company. They have to prove knowledge of joint casing application with the peculiarities that arise from the processing of materials and work techniques.

      A three-year practice of joint casing application and experience in the management of corresponding constructions have to be demonstrated.
    - o the leading fitter of the construction site

      The leading fitter of the construction site has to proof his qualification according to FW 603 and DVS 2212-4
    - o employees of individual sites and branch offices or business offices.

§ professionals that conduct activities affecting the quality of the product must have the ability and experience to be able to carry out their tasks, based on appropriate education and training.

The onsite responsible fitters have to demonstrate their qualification with exams in accordance with valid FW 603 and possibly DVS 2212-4.

The qualification for the processing of producer-specific sleeve systems with the appropriate equipment and machinery has to be demonstrated by an additional proof of the manufacturer (procedure for sleeve welding with incorporated electric heating elements).

Additional supporting joint casing application staff and / or personnel undergoing training may only work under the constant supervision and instruction of the leading fitter of the construction site.

§ The company has to

- o cover the need for necessary training and instruction of the professionals,
- o ensure the compliance with the requirements if using external professionals and / or subcontractors,
- o ensure the validity of certificates, qualifications, etc.,
- o appoint for each construction site a leading fitter of the construction site and qualified personnel in sufficient number,
- o provide prove for the proper disposal of waste or residual materials

- Evidence of activity and references

  The company or the responsible person has to submit evidence of past lessons learned and executed work, including references.

- Equipment

  For executing their work, companies need to use the required equipment in operational condition in sufficient quantities. The equipment shall meet the relevant safety requirements in accordance with the rules and regulations regarding work safety and health standards and correspond to the "state of the technical rules".

  If different sleeve materials or systems are processed, for which only special tools, equipment, machinery or test equipment are used, the company has to ensure that confusion is avoided.

- Implementation of the joint casing application

  It must be ensured that the materials and auxiliary materials required for the joint casing application are properly transported, stored and processed according to the manufacturer.

  The current processing instruction for the respective sleeve systems and materials used on the construction site must be available at all times.

- Quality Assurance

  The quality officers of the company has to test the fitters at the construction sites in regular intervals - at least twice a year. The documentation of the tests must be clear and comprehensible, identifying the construction site, the weather and construction site condition and the extent and nature of the tests, as well as the test results.

  The quality officer has to check through visual tests the condition of the technical equipment. The company has to set measurements how to deal with the results of the quality checks. For example how necessary improvement or corrective action can be quickly implemented.

Reports of independent, external audit bodies on the implementation quality have to be submitted upon request of the customer. It must be ensured that these are not older than one year.

A 2.4.2 Review and Certification

The inspections and certifications are carried out by certification bodies accredited according to EN ISO / IEC 17021, in their scope the certification process has to be implemented according to AGFW worksheet FW 605.

The companies that have been successfully tested, receive a certificate and can use the certification for promotion on the company vehicles, see Figure 11 and Figure 12.


AGFW

SKZ CERT GMBH
ZERTIFIZIERUNGEN

Die Arbeitsgemeinschaft für Wärme und Heizkraftwirtschaft – AGFW- e.V. und die SKZ-Cert GmbH Zertifizierungen bescheinigen dem Unternehmen:

ISROTEC Speyer GmbH
Brunckstr. 19
67346 Speyer

Bereich:

Muffenmontage an Kunststoffmantelrohren

Verantwortliche Fachperson: Herr Helmers

Qualitätsbeauftragter: Herr Zimmermann

die fachliche Eignung nach dem AGFW/FVGW-Arbeitsblatt

FW 605
(Ausgabe September 2003)

Der Nachweis wurde durch ein Qualitätsaudit erbracht.

Dieses Zertifikat ist gültig bis: 21. Januar 2011
Zertifikat Nr.: 1537/FW

Würzburg, 20. Januar 2008

Zertifizierungsstelle

SKZ-Cert Gesellschaft eines Zertifizierungen, Frankfurter Str. 15, D-97082 Würzburg, Tel. 0931-4104-310

ZERTIFIKAT

Figure 11: Model of certificate according to AGFW worksheet FW 605 for joint casing application

Figure 12: Advertising of a qualified fitter company on a company vehicles

A 2.4.3 Technical Rules

- AGFW-Worksheet FW 605; Edition 9.2003
  Joint casing application on preinsulated bounded pipes on flexible pipes; requirements for companies which carry out joint casing application
- Business rules to AGFW/FVGW-worksheet FW 605; Edition 9.2003
- Application forms for certification according to AGFW/FVGW-worksheet FW 605 for companies which carry out joint casing application ; Edition 9.2003
- Guidelines to AGFW/FVGW-worksheet FW 605
  - § FW605.L1; Edition 9.2003
    Qualification requirements for AGFW- und FVGW-Experts FW 605
  - § FW605.L3; Edition 9.2003
    Principles of cooperation between AGFW / FVGW and certification bodies
  - § FW605.L4; Edition 9.2003
    Comparative overview of existing management systems and qualifications

- EN ISO/IEC 17021; Edition 12.2006
  Conformity assessment – Requirements for bodies providing audit and certification of management systems

A 3 Sweden

Contact to: Svenska Fjärrvärmeföreningen
Olaf Palmes gata 31
101 53 Stockholm
Ture Nordenswan Tel.: +46 (8) 6772718
Mailto: ture.nordenswan@svenskfjarrvarme.se

A 3.1 Area of validity for ficensing of fitters and authorisation of fitter companies

Regulations for licensing and authorisation embraces the assembly of joint systems - sealed joints, alarms and insulation in connection with the laying of district heating pipes. Authorisation and licensing is awarded after application and approved examination of companies and fitters.

Licensed fitters and authorised companies are registered on Svensk Fjärrvärme‘s website.

A 3.2 Authorisation committee

A 3.2.1 Composition of the authorisation committee

Members of the committee are to be appointed by Svensk Fjärrvärme (Swedish District Heating Association) and manufacturing company each with one member and a third appointed jointly by the first two. Members are appointed for a term of office comprising three calendar years. Secretary and convener appointed by Svensk Fjärrvärme. The committee have a quorum when at least half of the members are present. The committee must record an up-to-date list of its members, which is enclosed with the ordinances.

Minutes are to be kept of committee meetings. Committee minutes and other documents are not to be made available to parties other than those working on the committee. Neither may information that comes to light during the processing of cases by the committee be disclosed to outsiders.

A 3.2.2 Committee‘s decision method

The committee decisions regarding licensing and authorisation are to be notified in writing. Refusals must be motivated. In cases such as e.g. the revocation of licensing or authorisation or the delivery of warnings, the committee must give the party the opportunity to plead its case before the decision.

Cases against the committee‘s decision are appealed to Svensk Fjärrvärme´s Technical Council. Appellants must lodge their records of appeal within three weeks of the service of the decision The Technical Council must have obtained the committee‘s report before the decision.

The committee‘s ordinances may only be changed through a decision by the superordinate Svensk Fjärrvärme‘s Technical Council. Likewise, the committee can be disbanded through decisions made in the same way as applies for amendments to the ordinances.

A 3.2.3 Business of the authorisation committee

The authorisation committee has the task, after examination according to the ordinances and regulations for authorisation and licensing, to issue licences and authorisation to fitters and

companies. The committee has the task to ensure that the ordinances do not restrict competition.

The authorisation committee must keep a list of licensed fitters and authorised companies. The committee must, in an appropriate manner, inform where the list of authorised companies and licenses fitters arc available.

The authorisation committee can appoint inspectors with the task of examining that the company and fitters uphold established quality requirements.

The committee must examine submitted complaints. The parties concerned are obligated to provide the committee with the details and documents that the committee may find necessary for checks or an objective examination of submitted complaints. The committee decides on any amendments.

Authorisation and licenses can be revoked by the committee if any of the conditions for authorisation or licensing are no longer fulfilled. The same applies if the company does not observe the laws, standards and directives. However the authorised company has the right to receive reasonable time to redress these matters.

A 3.3 Licensing of fitters

Licences for assembling the joint system are issued to fitters that have completed examination and who conform to the committee‘s requirements.

Licence applications are made in writing to the Authorisation committee at Svensk Fjärrvärme. A certificate of an approved theory examination and of practical training carried out at an authorised company in accordance with the requirements established by the Authorisation committee are to be enclosed with the application.

Licences can be revoked or limited by the committee if the conditions of licensing no longer exist. The same applies if it comes to the attention of the committee that the fitter does not follow applicable laws, standards and directives. However the fitter has the right to receive reasonable time to redress these matters.

A 3.3.1 Requirements

As conditions for licensing it applies that the fitter:

1. Holds approved application documents
2. Is trained and examined in theory according to the Casing Joint Technology
3. Holds a certificate from a joint supplier of authorisation in the joint type in question and specific execution
4. Holds a certificate from the inspector, appointed by the supplier, for practical experience[1] and specifically executed joint work on site
5. Holds a doctor‘s certificate according to AFS 2005:18 ‘Thermosetting plastic“, certificate of completed courses in “Hot Work“, VUC‘s ‘Basic course in safety on the road“ as well as training in the risks and safety actions when working with thermosetting plastic according to AFS 2005:18 “Thermosetting plastic“.

A 3.3.2 Charges for licensing

The charge for licenses is SEK 300.

[1] Guideline value: 500 executed joints under the supervision of a licensed fitter

A 3.3.3 Obligations for suppliers of joint systems

Suppliers of joint systems are responsible for documented assembly instructions and the training of fitters. Training updates must take place at least every second year.

The supplier must also ensure that the fitter is checked by independent inspectors at least every second year.

A 3.4 Authorisation of fitter companies

The authorisation application is made in writing to the authorisation committee at Svensk Fjärrvärme; see Figure 13 and Figure 14. The application is made using the application form issued by the authorisation coinmittee.

Authorised companies receive a certificate issued by the authorisation committee. Authorised companies and licensed fitters are registered on Svensk Fjärrvärme‘s website.

The authorised company is responsible to the client that the requirements demanded here are satisfied.

In the event of changes regarding the authorised company‘s fitters, company or authorized signatory or other circumstances of significance these must be reported immediately and without request to the committee. This also applies to such circumstances that can affect the company‘s ability to satisfactorily fulfill its duties or if the company ceases with joint assembly. Authorisation and licensing can be revoked. This can occur if demands as set out in A 3.4.1 no longer exist. The same applies if it comes to the attention of the committee via inspections, etc that the company does not follow applicable laws, standards and directives. However, the company has the right to receive reasonable time to redress these matters. Should the authorisation cease to apply the certificate must be returned without delay to the authorisation committee.

AUTHORISATION APPLICATION

This form applies for authorisation applications by companies that install the joint system. Joint system is defined as joining of alarm wires, assembly and application of sealed joints and insulation between the media pipes and casing including inspections before and after assembly. Welding work on the media pipes is not concerned by the aforementioned definition, welding must be carried out by companies with valid welding certification. Regulations for authorisation are evident from *REGULATIONS FOR AUTHORISATION AND LICENSING*

Details about the company are to be stated below. Personnel concerned are stated in appendix A. An up-to-date list of authorised companies and licensed fitters will be published on Svensk Fjärrvärme's website: www.svenskfjarrvarme.se.

Send applications to:

Svensk Fjärrvärme
SE-101 53 STOCKHOLM, SWEDEN

Company

Firm name: .....

Corporate identity number: .....

Postal address: .....

Postal code: .....

City: .....

Visiting address: .....

Insurance company: .....

Telephone: .....

Fax: .....

E-mail: .....

Authorized signatory: .....

Contact person: .....

Quality system

The authorised company must establish a quality system. Quality system is defined as the measures the company documents in work descriptions and which are routinely performed in connection with assembly work. These can include, e.g. inspection of machine functions, self-inspection of joining and work protocols.

Work descriptions must be drawn up which comprise assembly instructions and instructions for handling defective products and non-conformity at the assembly site.

Identification and marking of joints

Each completed joint is documented according to §7 in REGULATIONS FOR AUTHORISATION AND LICENSING.

Self-inspection

Specified self-inspections within each working operation are to be enclosed with the application

Work protocol

Type of work protocol used to be enclosed with the application.

Working environment

State the written handling and safety instructions regarding the personnel safety equipment and the working environment used.

.....

.....

.....

Company's safety officer: .....

City: .....Date:.....

Signature of authorized signatory:.....

Appendix A Personal details

Figure 13: Authorisation application

PERSONAL DETAILS ***APPENDIX A***

This form is completed for each supervisor and fitter The home address and telephone number must be stated as the license for assembly of the joint system is personal.

Surname: ..... Social security number: .....

First name: .....

Postal address: .....

Postal code and city: .....

Area of responsibility

☐ Supervisor ☐ Fitter

Medical examination according to AFS 2005:18 Date: .....

Completion of the Swedish Fire Protection Association's course HOT WORK Date: .....

Safety on the Road, Basic, Vägverket (Swedish Road Administration) VUC Date: .....

Course WORKING WITH THERMOSETTING PLASTIC according to AFS 2005:18 Date: .....

Supplier training, joint type and model and date:

Supplier .....

Supplier .....

Supplier .....

Supplier .....

Supplier .....

Supplier .....

Supplier .....

Supplier .....

Supplier .....

Supplier .....

The form is to be copied as necessary

Figure 14: Personal details

A 3.4.1 Requirements

As conditions for authorisation it applies that the company:

1. Holds approved application documents
2. Holds appropriate liability and contractor insurances
3. Observes demands from the authorities and directives issued by the client
4. Upholds submitted details
5. Presents the quality system[2]
6. Is responsible that assembly work is carried out by licensed fitters
7. Gives inspectors the possibility to make inspections and rectify any shortcomings
8. Pays established taxes and charges

Annual reports are submitted to the authorisation committee with support of Figure 15.

ANNUAL REPORT

Company .....

Authorisation number .....

Annual report for .....

List of licensed fitters with valid certificates

Name	Licence number	Doc in AFS 2005:18	Hot work	Safety on road	Trng. AFS 2005:18	Training at supl.	Joint type and model

Check each fulfilled item
The list is to be copied as necessary
Training at the supplier must be verifiable by the joint supplier.

Insurance company and insurance number .....

City and date .....

Signature.....

Telephone and e-mail address.....

Notes
This form has been provided to support reporting to the Authorisation committee. Changes must be reported continuously. Details concerning Authorised companies on Svensk Fjärrvärme's website are renewed in their entirety at the beginning of each calendar year, which is why the form must be submitted at the latest in January.

Figure 15: Annual report

[2] Quality system is defined as the measures the company documents in work descriptions and which are routinely performed in connection with assembly work. These can include e.g, inspection of machine functions, self-inspection of joining and work protocols. Work descriptions must be drawn up which comprise assembly instructions and instructions for handling defective products and non-conformity at the assembly site.

A 3.4.2 Charges

The authorisation committee may levy the charges for authorisation of companies.

A 3.5 Identification and marking of joints

Authorised companies must equip each joint with a label containing the name of the company and a serial joint number. The size of the label must be at least 5 x 10 cm and the numbers must be clear with a height of at least 8 mm. The label must be impervious to the surrounding environment.

Protocols are to be drawn up in A4 format for the joints and must contain at least the following data:

- Company and Authorisation number
- Responsible fitter with license number
- Excavation, check-box for approved all non-approved + line for remarks
- Assembly date
- Assembly conditions. Check-box for sunny, cloudy, light ram, steady ram
- Pressure testing of joint
- Alarm value
- Joint type
- Dimensions
- Client
- Workplace
- Air temperature
- Pipe temperature supply / return
- Miscellaneous
- Signature of inspector / contact person and date

A 3.6 Regulations

- Regulations for authorization and licensing, 2008
- Authorization application
- Ordinances for the district heating industry´s authorisation committee, 2008