Optimising cascade couplings for optimal use of low temperature heat source

Working paper – WP2 supply side task 2.3.1

Authors:

Martin Gierow (Kraftringen)

Niklas Bagge Mogensen (COWI)

Mark Sønderggaard Sørensen (COWI)

"The project has received funding from the European Union's Horizon 2020 research and innovation programme under grant agreement n° 767799-COOL DH- H2020-EE-2016-2017/H2020-EE-2017-RIA-IA"

COOL DH

COOL DISTRICT HEATING

Objective

- Analyse energy efficiency in heat pump systems that recover waste heat from low temperature heat sources for District Heating
- Provide recommendations when designing heat recovery systems
- Relevant for both demo sites within the CoolDH project

Method

- Standard tool EES (Engineering Equation Solver) was used to calculate heat pump systems
- A simulation model for the Max IV installation was set up and calibrated with actual operation data
- The model obtained was used to simulate various parameters for both of the demo sites

"The project has received funding from the European Union's Horizon 2020 research and innovation programme under grant agreement n° 767799-COOL DH- H2020-EE-2016-2017/H2020-EE-2017-RIA-IA"

COOL DH
COOL DISTRICT HEATING

Heat pump
Basics

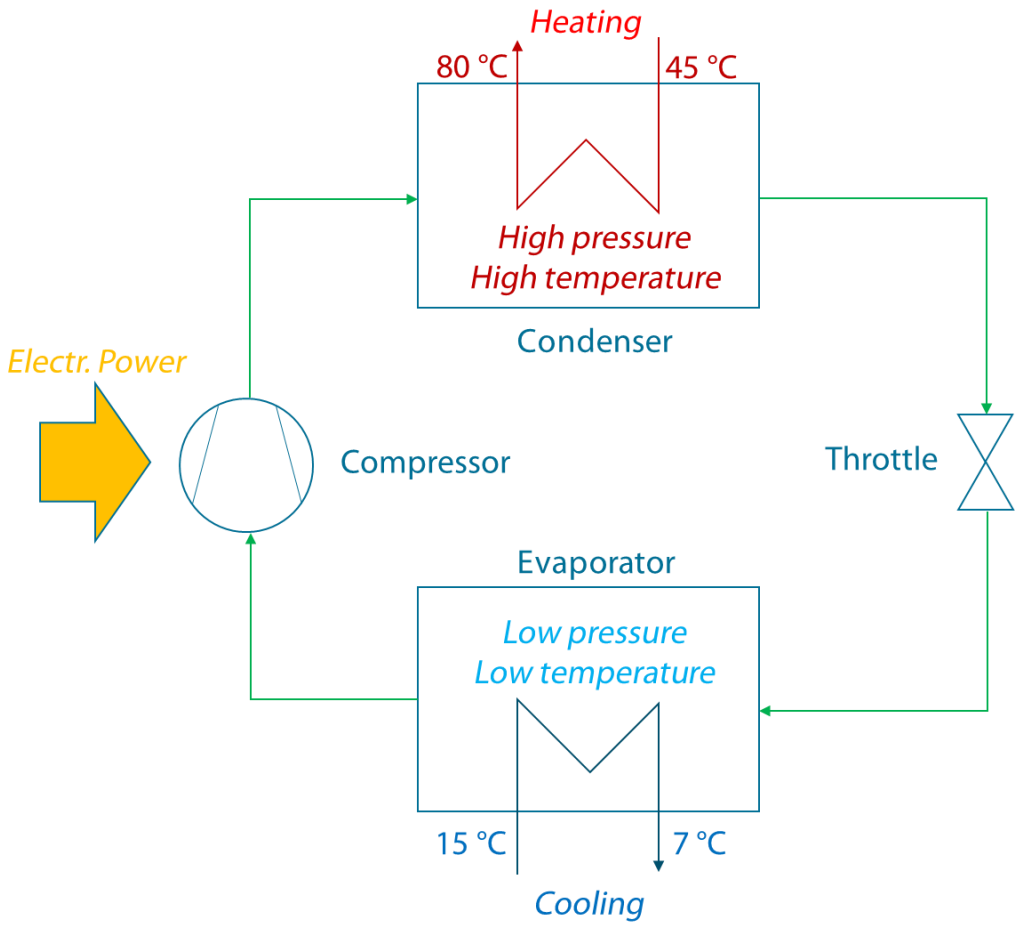

$$COP_{Carnot} = \frac{T_{Cond}}{T_{Cond} - T_{Evap}} \quad \text{(Temperatures in Kelvin)}$$

$$COPc = (273+80)/(80-7) = 4{,}8$$

"The project has received funding from the European Union's Horizon 2020 research and innovation programme under grant agreement n° 767799-COOL DH- H2020-EE-2016-2017/H2020-EE-2017-RIA-IA"

COOL DH
COOL DISTRICT HEATING

Cascade coupling

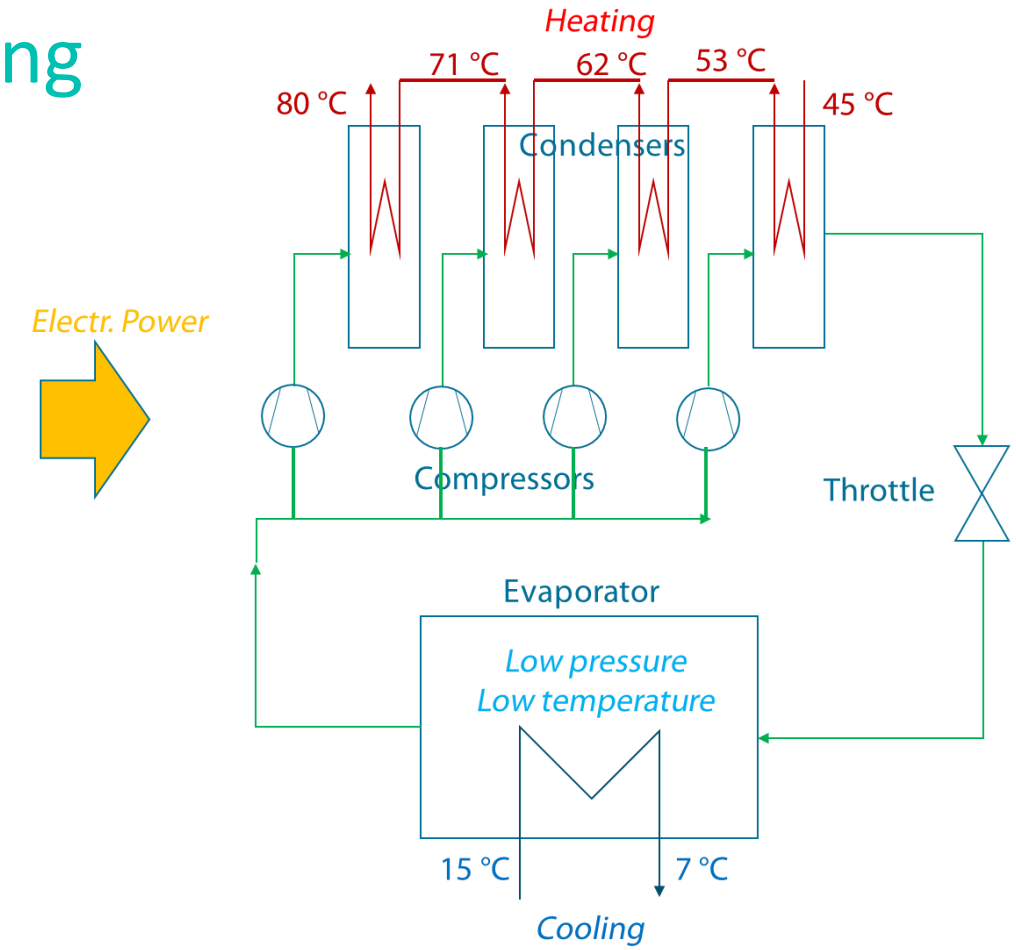

$$COP_{Carnot} = \frac{T_{Cond}}{T_{Cond} - T_{Evap}} \quad \text{(Temperatures in Kelvin)}$$

$$COPc = 0{,}25 * (273+80)/(80-7) + 0{,}25 * (273+71)/(71-7) \ldots\ldots = 5{,}8$$

"The project has received funding from the European Union's Horizon 2020 research and innovation programme under grant agreement n° 767799-COOL DH- H2020-EE-2016-2017/H2020-EE-2017-RIA-IA"

COOL DH
COOL DISTRICT HEATING

Demo sites

Lund, Sweden
Max IV research facility

- Partly in operation
- Three main heat pumps, all designed with several units
- Divided according to cooling temps
- Combination of units in series and parallell with cascade coupling

Høje-Taastrup, Denmark
City2 shopping center

- Partly in operation
- Two main heat pumps, one designed with two units
- Combination of units in series and parallell

Høje-Taastrup, Denmark
Study of heat rec
from cooling over distance

- Theoretical (so far)
- Four heat pumps
- Combination of units in series and cascade coupling

"The project has received funding from the European Union's Horizon 2020 research and innovation programme under grant agreement n° 767799-COOL DH- H2020-EE-2016-2017/H2020-EE-2017-RIA-IA"

COOL DH
COOL DISTRICT HEATING

Setup Max IV (one out of three heat pumps)

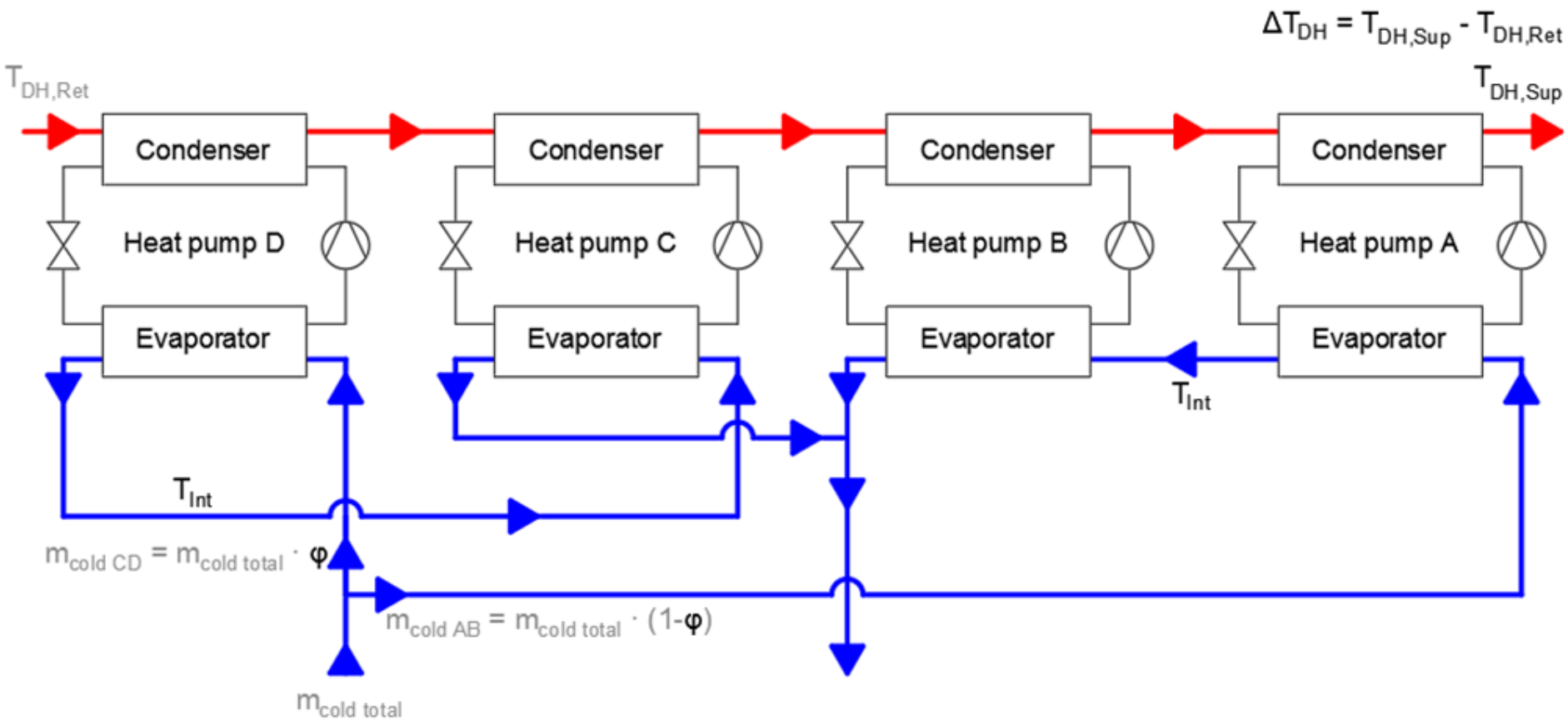

"The project has received funding from the European Union's Horizon 2020 research and innovation programme under grant agreement n° 767799-COOL DH- H2020-EE-2016-2017/H2020-EE-2017-RIA-IA"

COOL DH
COOL DISTRICT HEATING

Setup Høje-Taastrup - City2

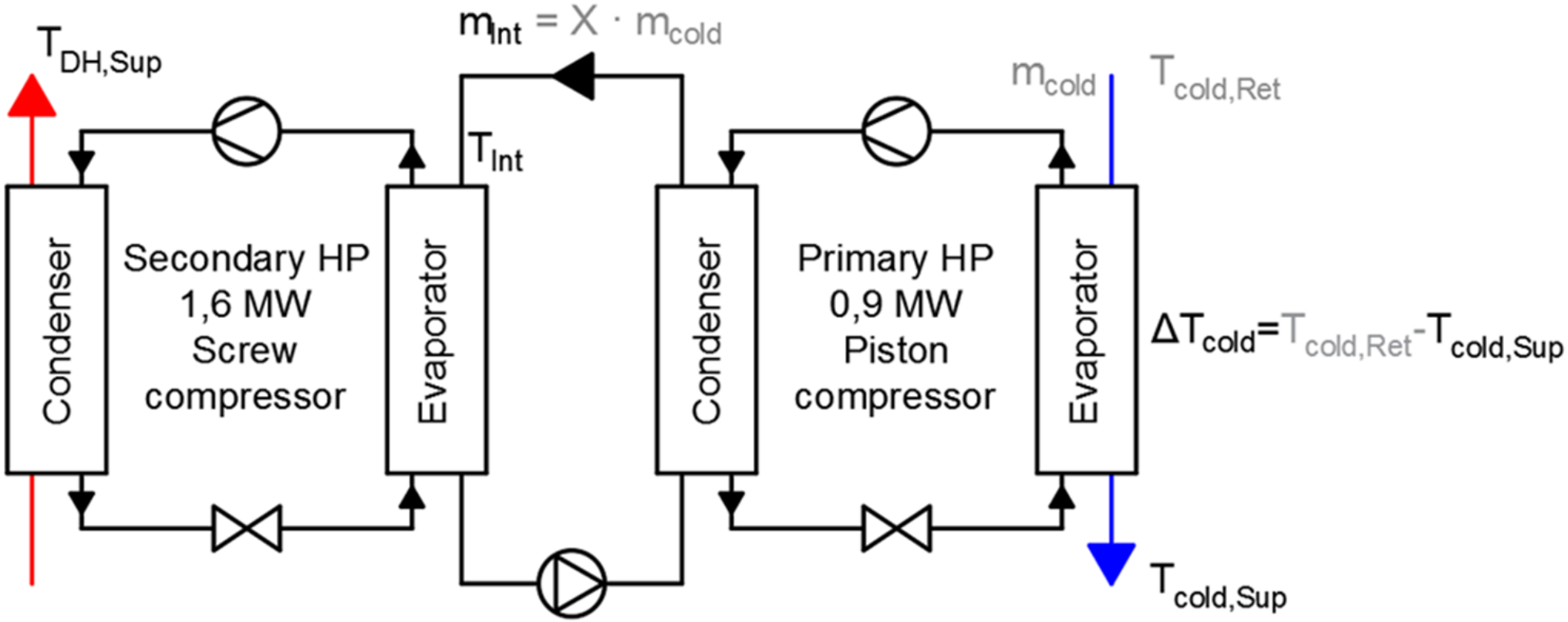

"The project has received funding from the European Union's Horizon 2020 research and innovation programme under grant agreement n° 767799-COOL DH- H2020-EE-2016-2017/H2020-EE-2017-RIA-IA"

COOL DH
COOL DISTRICT HEATING

Parameter studies

- Evaluation of performance of the Max IV setup as it is
- Efficiency improvement of the Max IV setup with low temp heat recovery
- For all demo systems, simulation of variation of
    - Heat recovery temperatures and cold side temperatures
    - Internal flows in the systems
    - Working media
- Load level and internal temperature effect on efficiency for the City2 setup
- Internal temperature effect on efficiency for the theoretical setup

"The project has received funding from the European Union's Horizon 2020 research and innovation programme under grant agreement n° 767799-COOL DH- H2020-EE-2016-2017/H2020-EE-2017-RIA-IA"

COOL DH
COOL DISTRICT HEATING

Example of result Max IV

- Importance of low district heating supply temperature
- Return temps also important

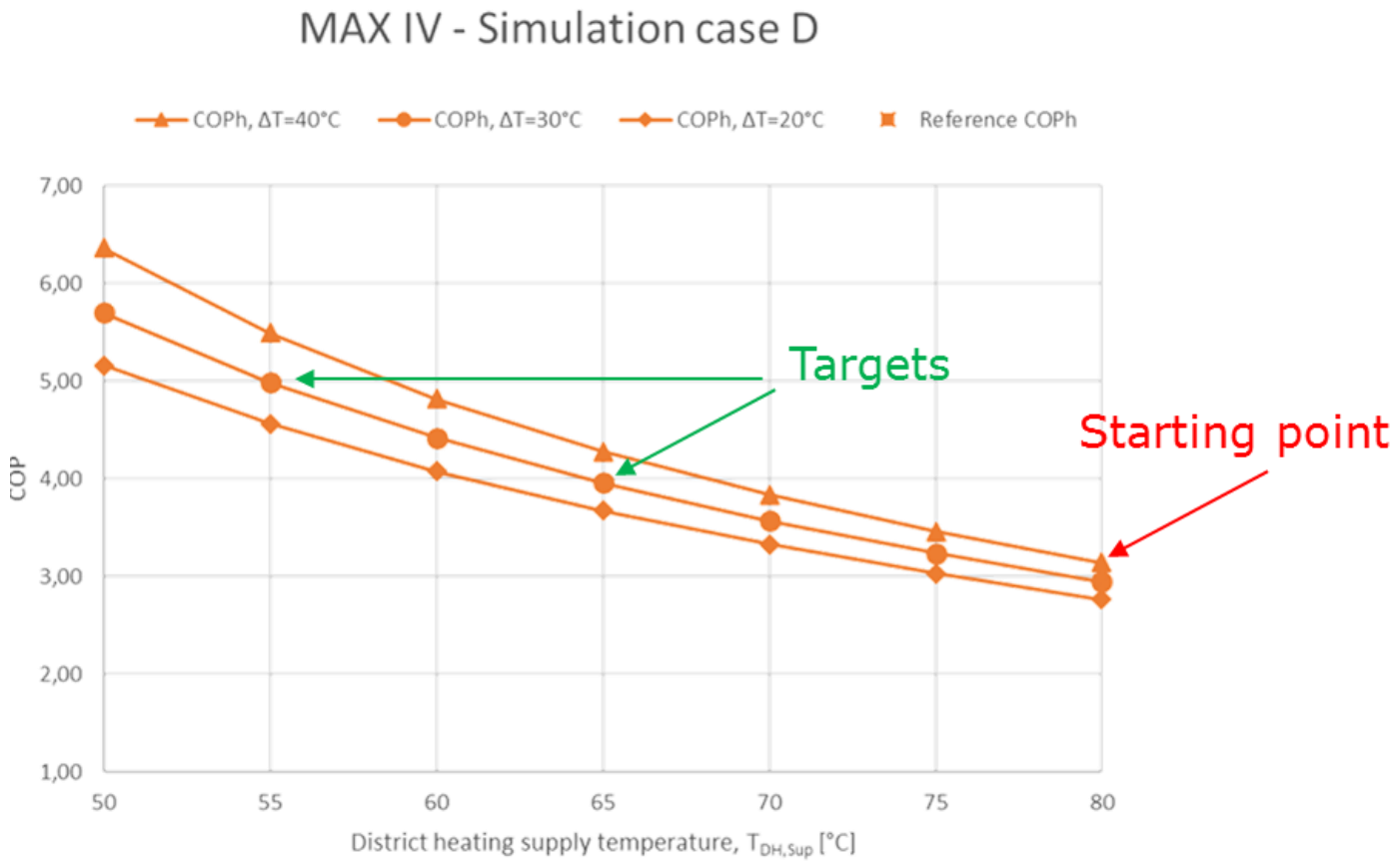

"The project has received funding from the European Union's Horizon 2020 research and innovation programme under grant agreement n° 767799-COOL DH- H2020-EE-2016-2017/H2020-EE-2017-RIA-IA"

COOL DH
COOL DISTRICT HEATING

Main learnings

- Design for and maintain high cooling temperatures and low heating temperatures
- If possible – divide into separate systems according to temperature levels
- For moderate/high temperature differences (for ex. DH) cascade coupling
- Design for the same temperature lift in each step in the cascade coupling
- High load in systems with screw compressors
- Choose wisely between available working medias
- Design internal and external pumps carefully
- Procurement according to LCC cost, not just investment cost

"The project has received funding from the European Union's Horizon 2020 research and innovation programme under grant agreement n° 767799-COOL DH- H2020-EE-2016-2017/H2020-EE-2017-RIA-IA"

COOL DH
COOL DISTRICT HEATING

Back-up

"The project has received funding from the European Union's Horizon 2020 research and innovation programme under grant agreement n° 767799-COOL DH- H2020-EE-2016-2017/H2020-EE-2017-RIA-IA"

COOL DH
COOL DISTRICT HEATING

Case studies Max IV

		Input values				
Simulation case no.	Description	φ [-]	T_{Int} [°C]	$T_{DH,Sup}$ [°C]	DT_{DH} [°C]	Refrigerant
A	Reference calculation	0,5	11	80	30	R134a
B	Variation of cold water flow distribution (φ)	**[0.0 – 1.0]**	11	80	30	R134a
C	Variation of intermediate temperature on cold water side (T_{Int})	0.5	**[8 - 14]**	80	30	R134a
D	Variation of district heating (DH) supply line temperature ($T_{DH,Sup}$) and temperature difference between district heating supply and return line (DT_{DH})	0.5	11	**[50 - 80]**	**[20 - 40]**	R134a
E	Variation of heat pump refrigerant	0.5	11	80	30	**R134a** **R1234ze** **R600a** **R717**

"The project has received funding from the European Union's Horizon 2020 research and innovation programme under grant agreement n° 767799-COOL DH- H2020-EE-2016-2017/H2020-EE-2017-RIA-IA"

COOL DH
COOL DISTRICT HEATING

Case studies Høje-Taastrup City2

		Input values						
Simulation case no.	Description	Load level [%]	$T_{cold,Sup}$ [°C]	DT_{cold} [°C]	m_{Int} [kg/s]	T_{Int} [°C]	$T_{DH,Sup}$ [°C]	Refrigerant
A	Reference calculation	80	6	10	$2 \cdot m_{cold}$	30	55	R134a
B	Variation of load level	**[40 - 100]**	6	10	$2 \cdot m_{cold}$	30	55	R134a
C	Variation of cooling supply temperature and temperature difference between cooling supply and return line	80	**6 & 8**	**[4 - 12]**	$2 \cdot m_{cold}$	30	55	R134a
D	Variation of flow in the intermediate circuit	80	6	10	**[0,5 - 10] $\cdot m_{cold}$**	30	55	R134a
E	Variation of intermediate temperature	80	6	10	$2 \cdot m_{cold}$	**[25 - 35]**	55	R134a
F	Variation of district heating supply line temperature	80	6	10	$2 \cdot m_{cold}$	30	**[45 - 65]**	R134a
G	Variation of heat pump refrigerant	80	6	10	$2 \cdot m_{cold}$	30	55	**R134a R1234ze R600a R717**

"The project has received funding from the European Union's Horizon 2020 research and innovation programme under grant agreement n° 767799-COOL DH- H2020-EE-2016-2017/H2020-EE-2017-RIA-IA"

COOL DH
COOL DISTRICT HEATING

Example of result Høje-Taastrup City2

- Importance of flow to keep low temperature change across heat exchanger

- Importance of pump dimensioning

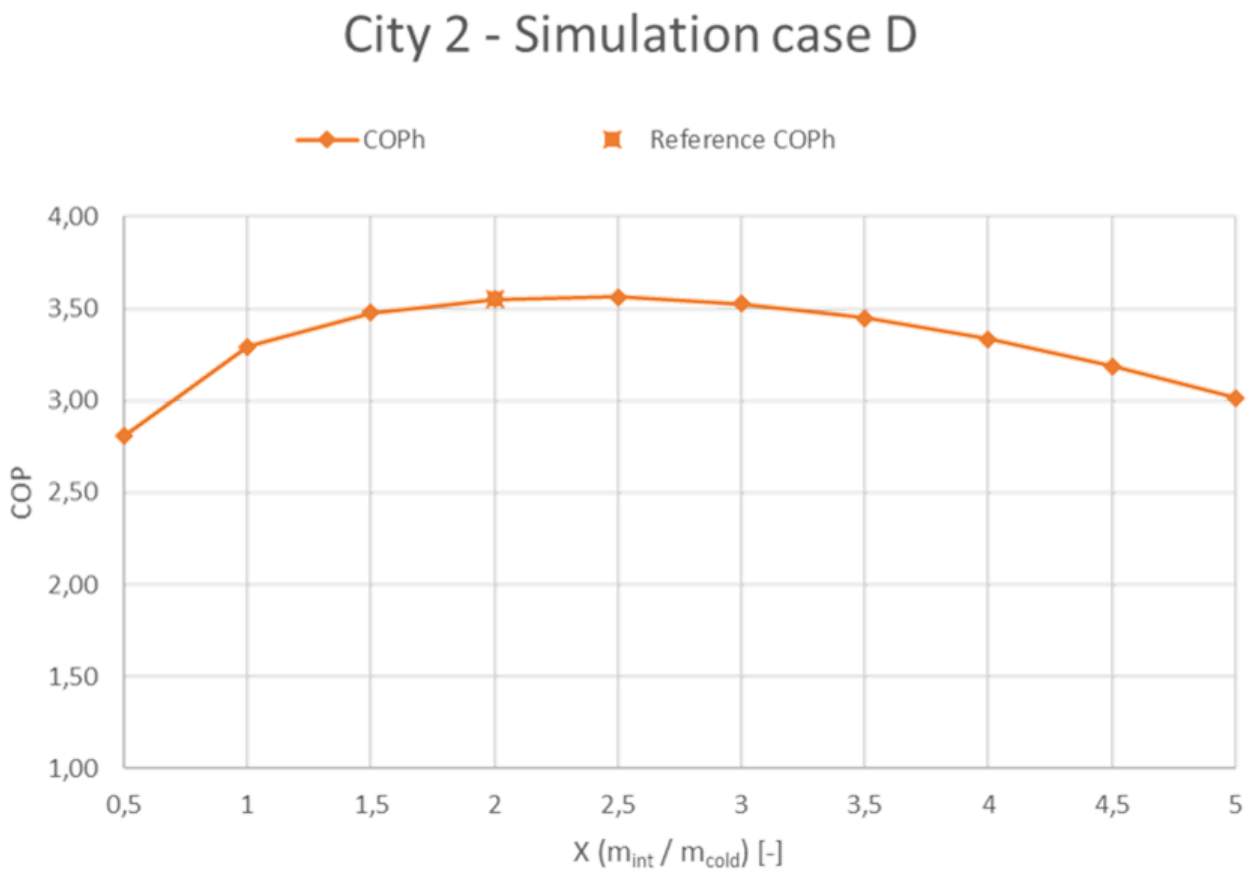

"The project has received funding from the European Union's Horizon 2020 research and innovation programme under grant agreement n° 767799-COOL DH- H2020-EE-2016-2017/H2020-EE-2017-RIA-IA"

COOL DH
COOL DISTRICT HEATING

Example of result Høje-Taastrup City2

- Importance of keeping high load in systems with screw compressors

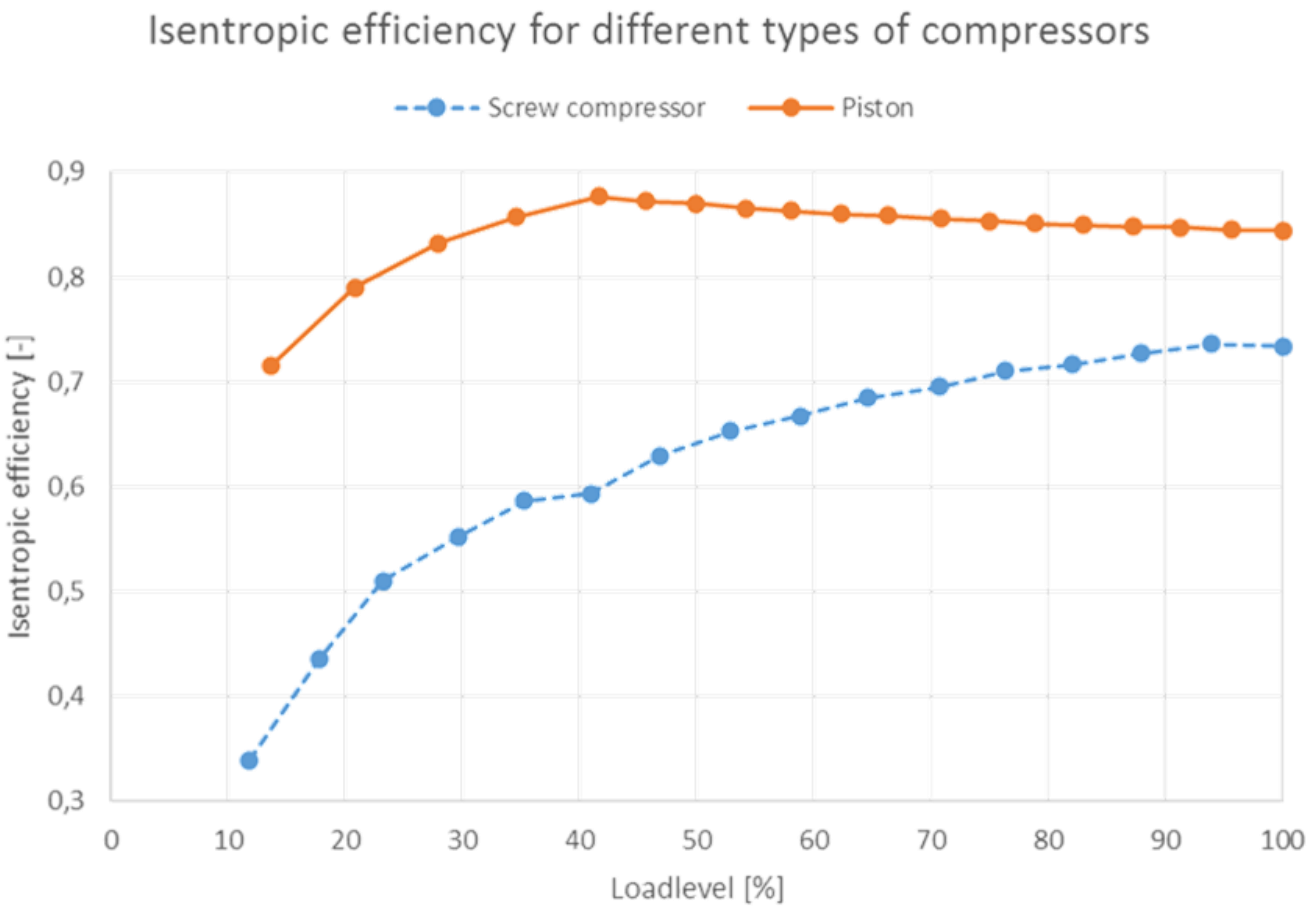

"The project has received funding from the European Union's Horizon 2020 research and innovation programme under grant agreement n° 767799-COOL DH- H2020-EE-2016-2017/H2020-EE-2017-RIA-IA"

COOL DH
COOL DISTRICT HEATING

Theoretical case – Long distance recovery

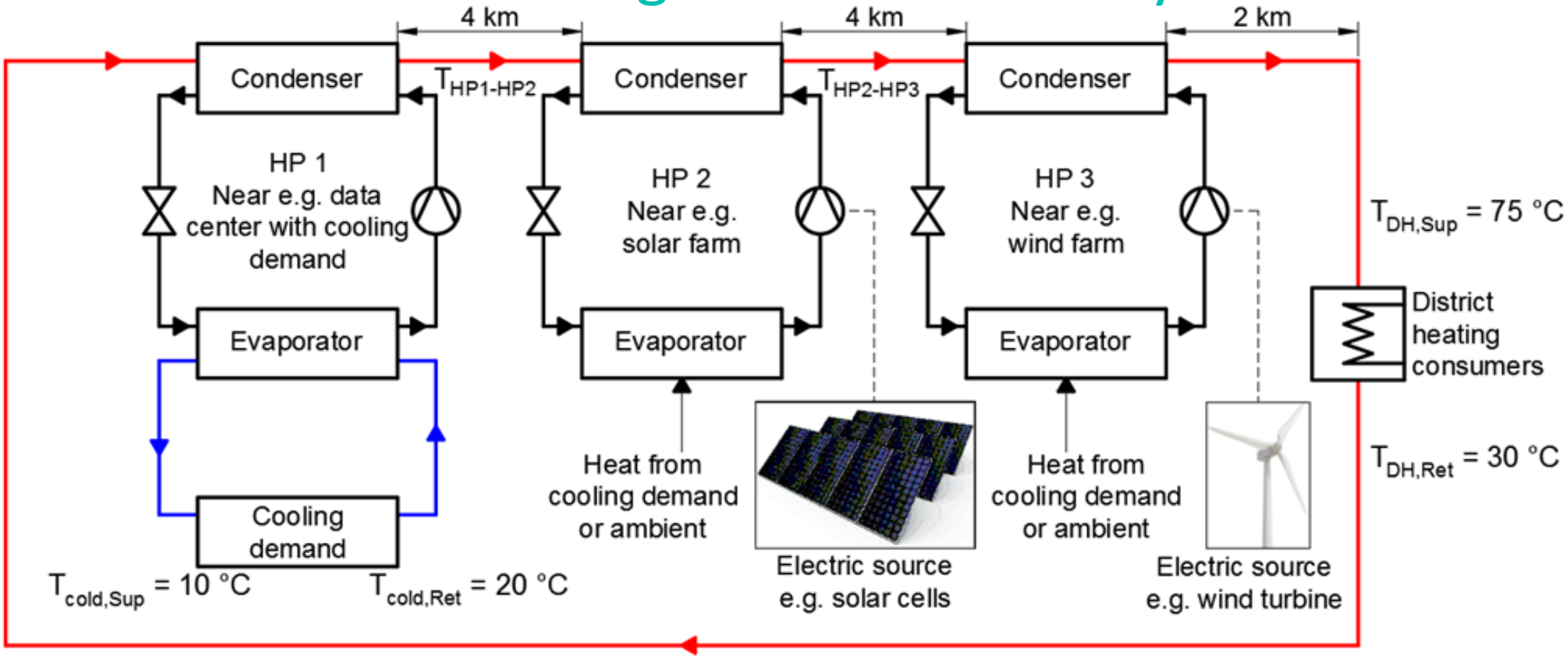

"The project has received funding from the European Union's Horizon 2020 research and innovation programme under grant agreement n° 767799-COOL DH- H2020-EE-2016-2017/H2020-EE-2017-RIA-IA"

COOL DH
COOL DISTRICT HEATING

Results theoretical case

- Same temperature lift in each heat pump result in highest overall COP

- Reference case COP
  - Single heat pump 2,67
  - Cascade heat pump 3,52
  - Increase COP ~ 32%

"The project has received funding from the European Union's Horizon 2020 research and innovation programme under grant agreement n° 767799-COOL DH- H2020-EE-2016-2017/H2020-EE-2017-RIA-IA"

COOL DH
COOL DISTRICT HEATING

Exploitation and replication

- Results to be exploited
  - Work package four – City2
  - Similar installation many places
- Potential users
  - Project owners
  - Consultants
- Project flow
  - Project design → System analysis/optimisation → Manufacturer → Evaluation → Monitoring
- Project economy
  - Procurement – do not go for the lowest investment
  - Go best possible life cycle economy

"The project has received funding from the European Union's Horizon 2020 research and innovation programme under grant agreement n° 767799-COOL DH- H2020-EE-2016-2017/H2020-EE-2017-RIA-IA"

COOL DH
COOL DISTRICT HEATING